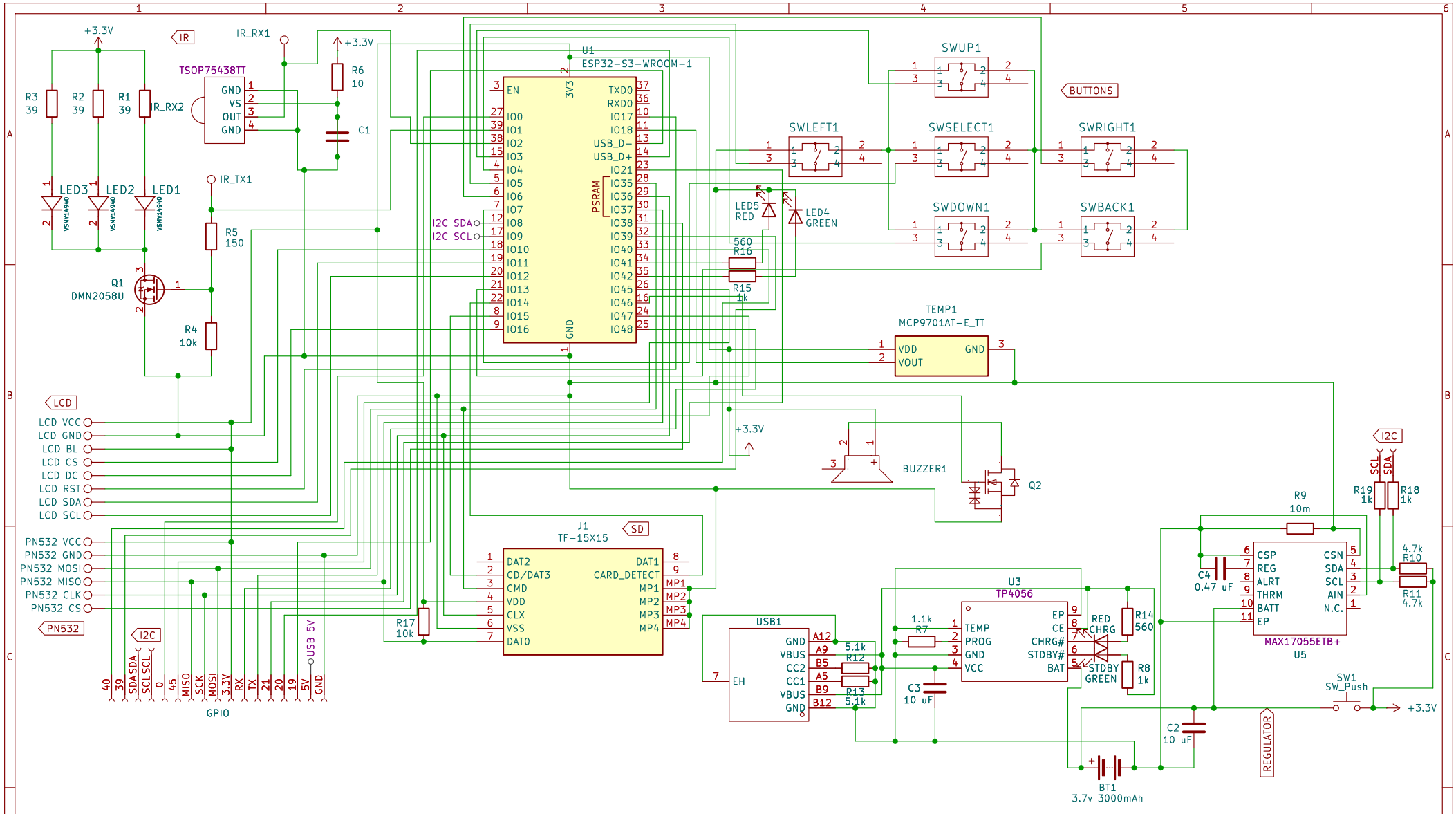

Dylan Haines © 2025

Sheet: /

File: phantomware.kicad_sch

Title: Phantomware v1.0

Size: A4	Date: 2025-07-30	Rev: 3
KiCad E.D.A. 9.0.3		Id: 1/1